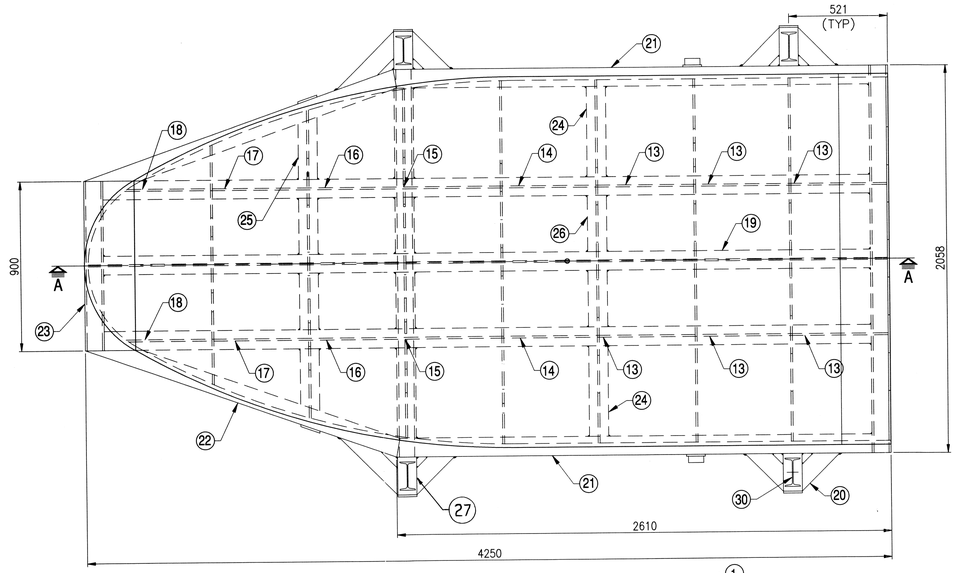

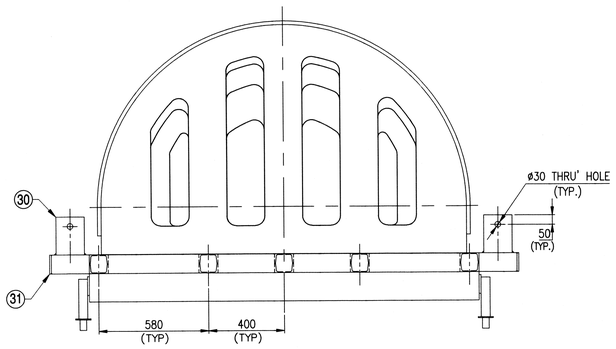

VIEW-B

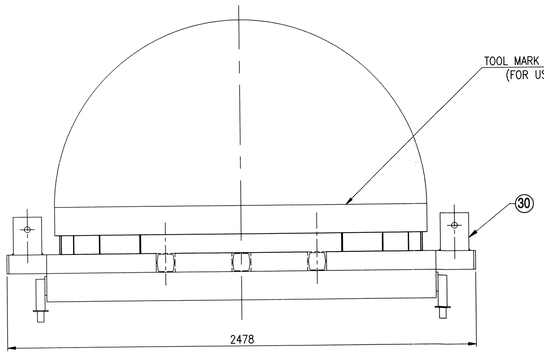

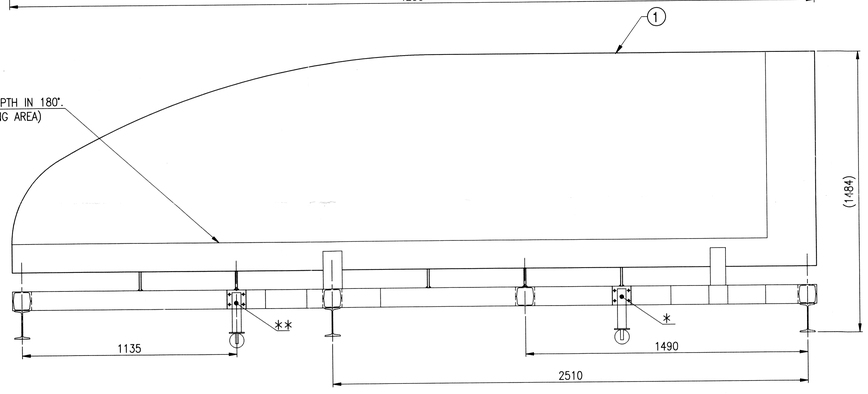

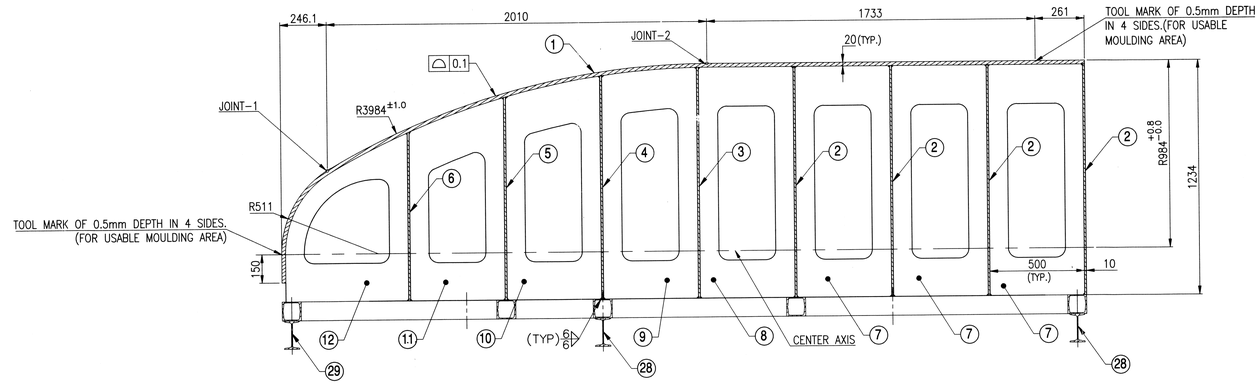

SECTIONAL VIEW-AA

NOTE:
1)SHELL TO WEB & SHELL TO CIRCULAR STIFFNER TO BE WELDED BY INTERMITTENT WELD OF 50 (100).
2)THE SHELL SURFACE SHOULD BE LEAK PROOF.
3)FINAL MACHINING TO BE CARRIED OUT AFTER COMPLETION OF WELDING AND STRESS RELIEVING OF THE STRUCTURE.
4)STRESS RELIEVING TO BE CARRIED OUT BY HEATING METHOD ONLY.
5)20MM MIN. THICKNESS OF ITEM NO.1 TO BE MAINTAINED AFTER FINAL ROLLING & MACHINING. PLATE OF SUFFICIENT THICKNESS TO BE SELECTED FOR MACHINING.
6)BOX 100x100 TO BE MADE BY JOINING TWO NUMBERS OF ISMC100.
7)TWO JOINTS HAVE BEEN IDENTIFIED .HARDWARE SHOULD BE FABRICATED WITH BARE MIN. (IF POSSIBLE TWO).
8)ACCEPTANCE WILL BE DONE FROM OUR SIDE BASED ON LEAK TEST @ CMSE.VSSC.
9) * LOCATION AT WHICH DETACHABLE WHEEL ASSEMBLY WITH NON- SWIVEL JOINT & BRAKE. (BLICKLE MAKE / 2.5TON LOAD RATING) TO BE PROVIDED.
10)** LOCATION AT WHICH DETACHABLE WHEEL ASSEMBLY WITH SWIVEL JOINT & BRAKE. (BLICKLE MAKE / 2.5TON LOAD RATING) TO BE PROVIDED.
11)REFER TO ANNEXURE-1 ATTACHED FOR PROCESS PLAN & MOULD ACCEPTANCE CRITERIA.

ITEM NO.	DESCRIPTION	MATERIAL	QTY.	WT.	REMARKS
31	MS PLATE 100x100x10THK.	MS	4		
30	ISMB 150x200L	IS 808	4		
29	ISMB 150x900L	IS 808	1		
28	ISMB 150x2460L	IS 808	2		
27	ISMC 100x50x200L	IS 808	8		BOX
26	ISMC 100x50x300L	IS 808	12		BOX
25	ISMC 100x50x328L	IS 808	4		BOX
24	ISMC 100x50x480L	IS 808	8		BOX
23	ISMC 100x50x900L	IS 808	2		BOX
22	ISMC 100x50x1741L	IS 808	4		BOX
21	ISMC 100x50x2610L	IS 808	4		BOX
20	ISMC 100x50x342L	IS 808	16		BOX
19	ISMC 100x50x4050L	IS 808	6		BOX
18	WEB-12	Fe410WB IS2062	2		257-112-19-004 00 17
17	WEB-11	Fe410WB IS2062	2		257-112-19-004 00 16
16	WEB-10	Fe410WB IS2062	2		257-112-19-004 00 15
15	WEB-9	Fe410WB IS2062	2		257-112-19-004 00 14
14	WEB-8	Fe410WB IS2062	2		257-112-19-004 00 13
13	WEB-7	Fe410WB IS2062	6		257-112-19-004 00 12
12	WEB-6	Fe410WB IS2062	1		257-112-19-004 00 11
11	WEB-5	Fe410WB IS2062	1		257-112-19-004 00 10
10	WEB-4	Fe410WB IS2062	1		257-112-19-004 00 09
9	WEB-3	Fe410WB IS2062	1		257-112-19-004 00 08
8	WEB-2	Fe410WB IS2062	1		257-112-19-004 00 07
7	WEB-1	Fe410WB IS2062	3		257-112-19-004 00 06
6	CIRCULAR STIFFENER-5	Fe410WB IS2062	1		257-112-19-004 00 05
5	CIRCULAR STIFFENER-4	Fe410WB IS2062	1		257-112-19-004 00 04
4	CIRCULAR STIFFENER-3	Fe410WB IS2062	1		257-112-19-004 00 03
3	CIRCULAR STIFFENER-2	Fe410WB IS2062	1		257-112-19-004 00 02
2	CIRCULAR STIFFENER-1	Fe410WB IS2062	4		257-112-19-004 00 01
1	SHELL 20mm THK.	Fe410WB IS2062	1		

DO NOT SCALE THE DRAWING
ASK IF IN DOUBT
UNLESS OTHERWISE SHOWN:–
ALL DIMENSIONS IN MILLIMETRES
REMOVE SHARP EDGES AND BURRS
CHAMFER 1mm X 45°
MACHINING FINISH IN MICRONS:–
▽ 8–25 ▽▽ 1.6–8
▽▽▽ 0.025–1.6 ▽▽▽▽ < 0.025

DEVIATION FOR NON-TOLERANCED DIMENSIONS (IS:2102-MEDIUM GRADE)

DIAMETER & LENGTH UPTO & INCL.			LENGTH IN mm OF SHORTER SIDE OF ANGLE UPTO & INCL.		
6	— 30	± 0.1	1	– 6	± 1°.00"
30	— 120	± 0.2	6	– 30	± 0°.30"
120	— 315	± 0.3	30	– 120	± 0°.20"
315	— 1000	± 0.5	120	– 400	± 0°.10"
1000	— 2000	± 0.8			
2000	— 4000	± 1.2			
4000 & ABOVE		± 2.0			

REV.NO.	ZONE	DESCRIPTION	SIGN.	DATE
		REVISIONS		

ASSEMBLY DRG.

MATERIAL	TITLE: MOULD FOR SSLV OGIVE PLF	No.OFF: 1	WT.Kg.
DGN. Vinu 24/7/18	GOVERNMENT OF INDIA	UNIT/DIVISION/PROJECT: CMSE/LCSD/SSLV	
DRN. rajil 24.07	INDIAN SPACE RESEARCH ORGANISATION		
CHD. 24/7/18	VIKRAM SARABHAI SPACE CENTRE, TRIVANDRUM		
CHD.		DRG.NO.: 257-112-19-004 00 00	
APPD. 27/7/18		SCALE : NTS	SHEET 1 OF 1
2018 SIGN. DATE			A1

rajil.d.senthil

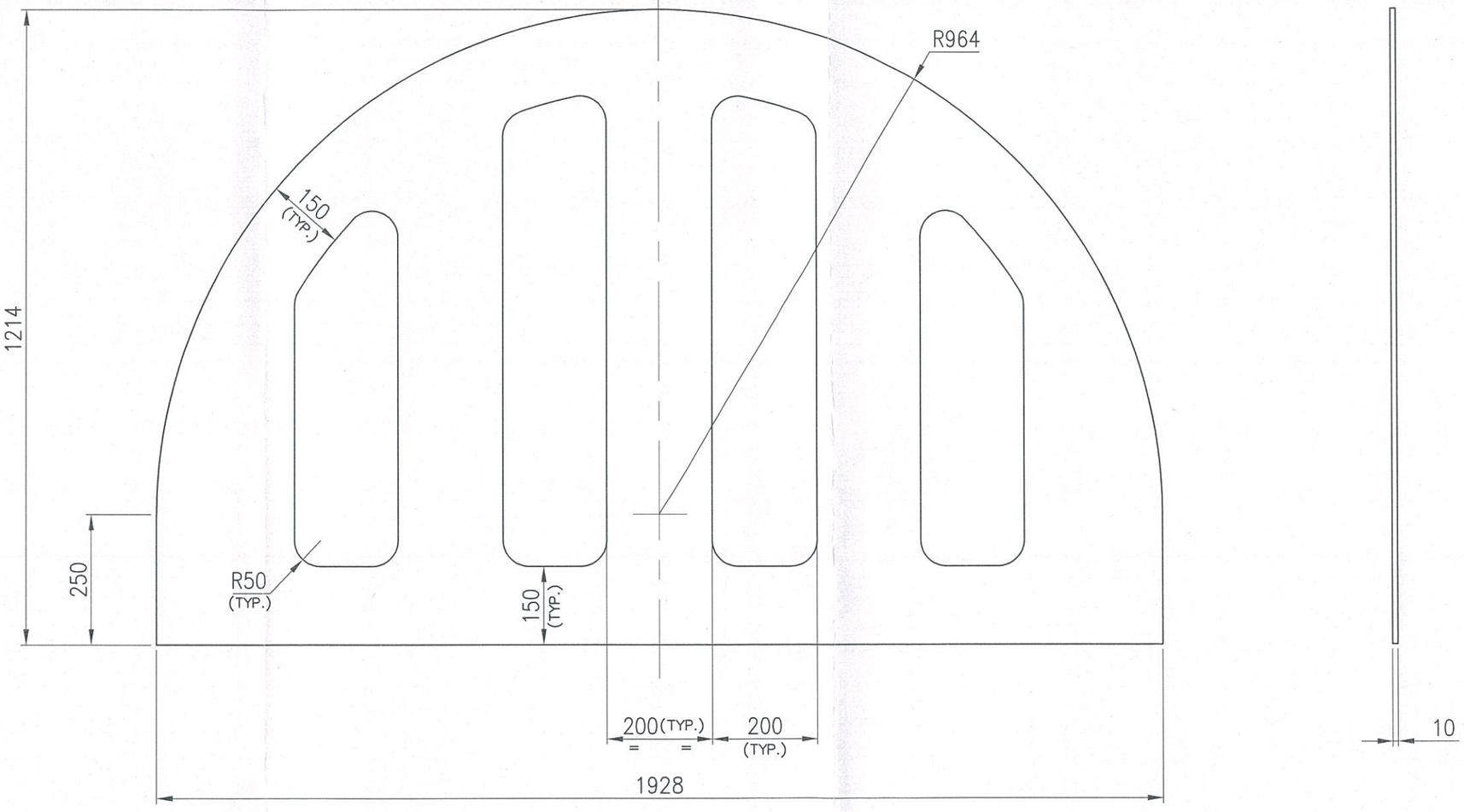

MACHINING DEVIATION TO IS:2102 (MEDIUM GRADE) UNLESS SPECIFIED OTHERWISE

LENGTH OR DIA	LENGTH IN mm OF SHORTER SIDE OF ANGLE											
	UP TO 6		6	30	30	120	120	315	315	1000	1000	2000	2000	4000	4000 ABOVE		
	UP TO 6		6–30		30–120		120–400										
B	±0.1		±0.2		±0.3	C	±0.5	D	±0.8	E	±1.2	F	±2.0	G	±3.0	H	±6°	I	±30°	J	±20°	K	±10°

FINISH : ▽

ITEM NO.	DESCRIPTION	MATERIAL	QTY.	WT.	REMARKS

DO NOT SCALE THE DRAWING
ASK IF IN DOUBT
UNLESS OTHERWISE SHOWN:–

ALL DIMENSIONS IN MILLIMETRES

REMOVE SHARP EDGES AND BURRS
CHAMFER 1mm X 45°

MACHINING FINISH IN MICRONS:–

▽ 8–25 ▽▽ 1.5–8
▽▽▽ 0.025–1.6 ▽▽▽▽ <0.025

REV.NO.	ZONE	DESCRIPTION	SIGN	DATE

REVISIONS

ASSEMBLY DRG.

MATERIAL: Fe410WB IS2062

TITLE: CIRCULAR STIFFENER-1

No.OFF: 4

WT.Kg.

DGN.	Vineeth	26.7.18
DRN.	rajil	24.07
CHD.		26/7/18
CHD.		
APPD		27/7
2018	SIGN.	DATE

GOVERNMENT OF INDIA
INDIAN SPACE RESEARCH ORGANISATION
VIKRAM SARABHAI SPACE CENTRE
TRIVANDRUM

UNIT/DIVISION/PROJECT: CMSE/LCSD/SSLV

DRG.NO. 257-112-19-004 00 01

SCALE 1:10 SHEET 1 OF 1

rajil.d.senthil A3

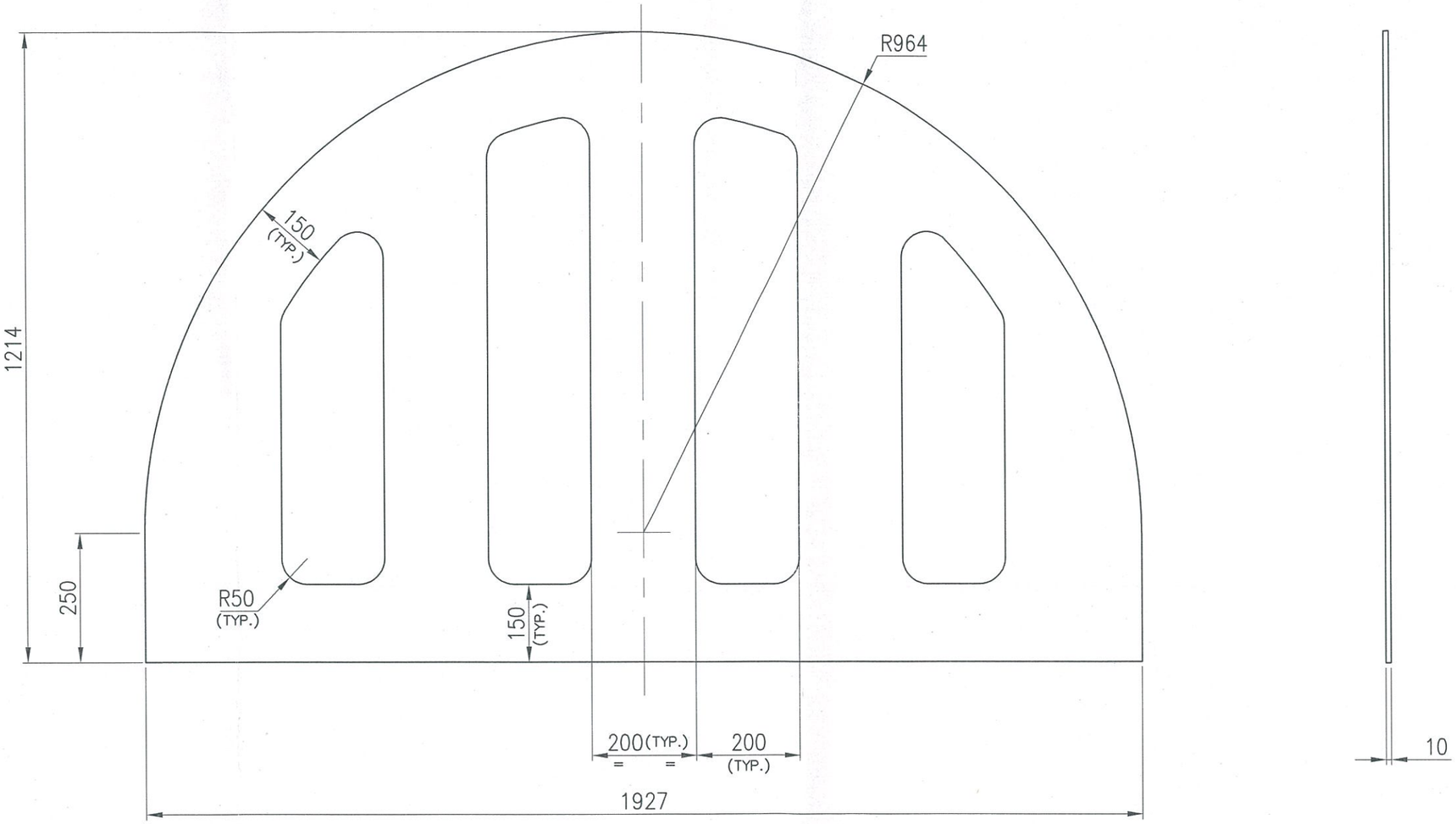

MACHINING DEVIATION TO ISI:2102 (MEDIUM GRADE) UNLESS SPECIFIED OTHERWISE

LENGTH OR DIA	LENGTH IN mm OF SHORTER SIDE OF ANGLE											
	UP TO 6		6	30	30	120	120	315	315	1000	1000	2000	2000	4000	4000 ABOVE	
	UP TO 6		6	30	30	120	120	315	315	1000	1000	2000	2000	4000	4000 ABOVE	
	±0.1		±0.2		±0.3		±0.5		±0.8		±1.2		±2.0		±3.0	
	UP TO 6		6–30		30–120		120–400									
	±6'		±30'		±20'		±10'									

FINISH : ▽

ITEM NO.	DESCRIPTION	MATERIAL	QTY.	WT.	REMARKS

DO NOT SCALE THE DRAWING
ASK IF IN DOUBT
UNLESS OTHERWISE SHOWN:–

ALL DIMENSIONS IN MILLIMETRES

REMOVE SHARP EDGES AND BURRS
CHAMFER 1mm X 45°

MACHINING FINISH IN MICRONS:–

▽ 8–25 ▽▽ 1.5–8
▽▽▽ 0.025–1.6 ▽▽▽▽ <0.025

REV.NO.	ZONE	DESCRIPTION	SIGN	DATE

REVISIONS

ASSEMBLY DRG.

MATERIAL: Fe410WB IS2062

TITLE: CIRCULAR STIFFENER-2

No.OFF: 1

WT.Kg.

DGN.	Vivek	26.7.18
DRN.	rajil	24.07
CHD.		24/7/18
CHD.		
APPD		27/7
2018	SIGN.	DATE

GOVERNMENT OF INDIA
INDIAN SPACE RESEARCH ORGANISATION
VIKRAM SARABHAI SPACE CENTRE
TRIVANDRUM

UNIT/DIVISION/PROJECT: CMSE/LCSD/SSLV

DRG.NO. 257-112-19-004 00 02

SCALE 1:10 SHEET 1 OF 1

rajil.d.senthil A3

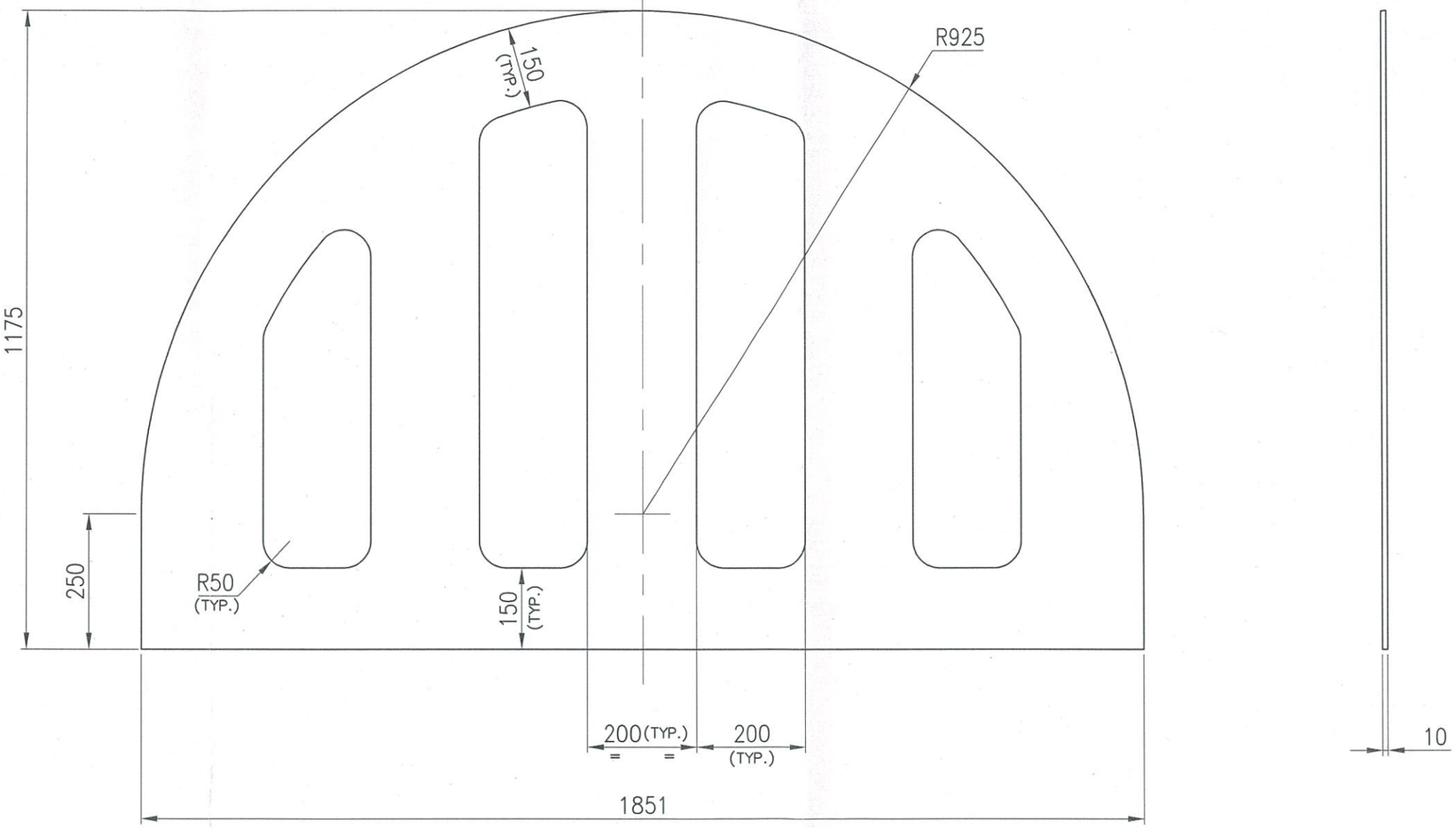

FINISH : ▽

ITEM NO.	DESCRIPTION	MATERIAL	QTY.	WT.	REMARKS

MACHINING DEVIATION TO ISI:2102 (MEDIUM GRADE) UNLESS SPECIFIED OTHERWISE

LENGTH OR DIA	LENGTH IN mm OF SHORTER SIDE OF ANGLE									
	UP TO 6		6 30		30 120		120 315		315 1000	1000 2000	2000 4000	4000 ABOVE
	UP TO 6	±6°	6–30	±30°	30–120	±20°	120–400	±10°				
UP TO 6	±0.1		±0.2		±0.3		±0.5		±0.8	±1.2	±2.0	±3.0
6 30	±0.2											
30 120	±0.3											
120 315	±0.5											
315 1000	±0.8											
1000 2000	±1.2											
2000 4000	±2.0											
4000 ABOVE	±3.0											

DO NOT SCALE THE DRAWING
ASK IF IN DOUBT
UNLESS OTHERWISE SHOWN:–

ALL DIMENSIONS IN MILLIMETRES

REMOVE SHARP EDGES AND BURRS
CHAMFER 1mm X 45°

MACHINING FINISH IN MICRONS:–

▽ 8–25 ▽▽ 1.5–8
▽▽▽ 0.025–1.6 ▽▽▽▽ <0.025

REV.NO.	ZONE	DESCRIPTION	SIGN	DATE

REVISIONS

ASSEMBLY DRG.

MATERIAL	TITLE	No.OFF	WT.Kg.
Fe410WB IS2062	CIRCULAR STIFFENER-3	1	

DGN.	Vivek	26.7.18
DRN.	rajil	24.07
CHD.		26/7/18
CHD.		
APPD		25/7
2018	SIGN.	DATE

GOVERNMENT OF INDIA
INDIAN SPACE RESEARCH ORGANISATION
VIKRAM SARABHAI SPACE CENTRE
TRIVANDRUM

UNIT/DIVISION/PROJECT
CMSE/LCSD/SSLV

DRG.NO.
257-112-19-004 00 03

SCALE 1:10 SHEET 1 OF 1

rajil.d.senthil A3

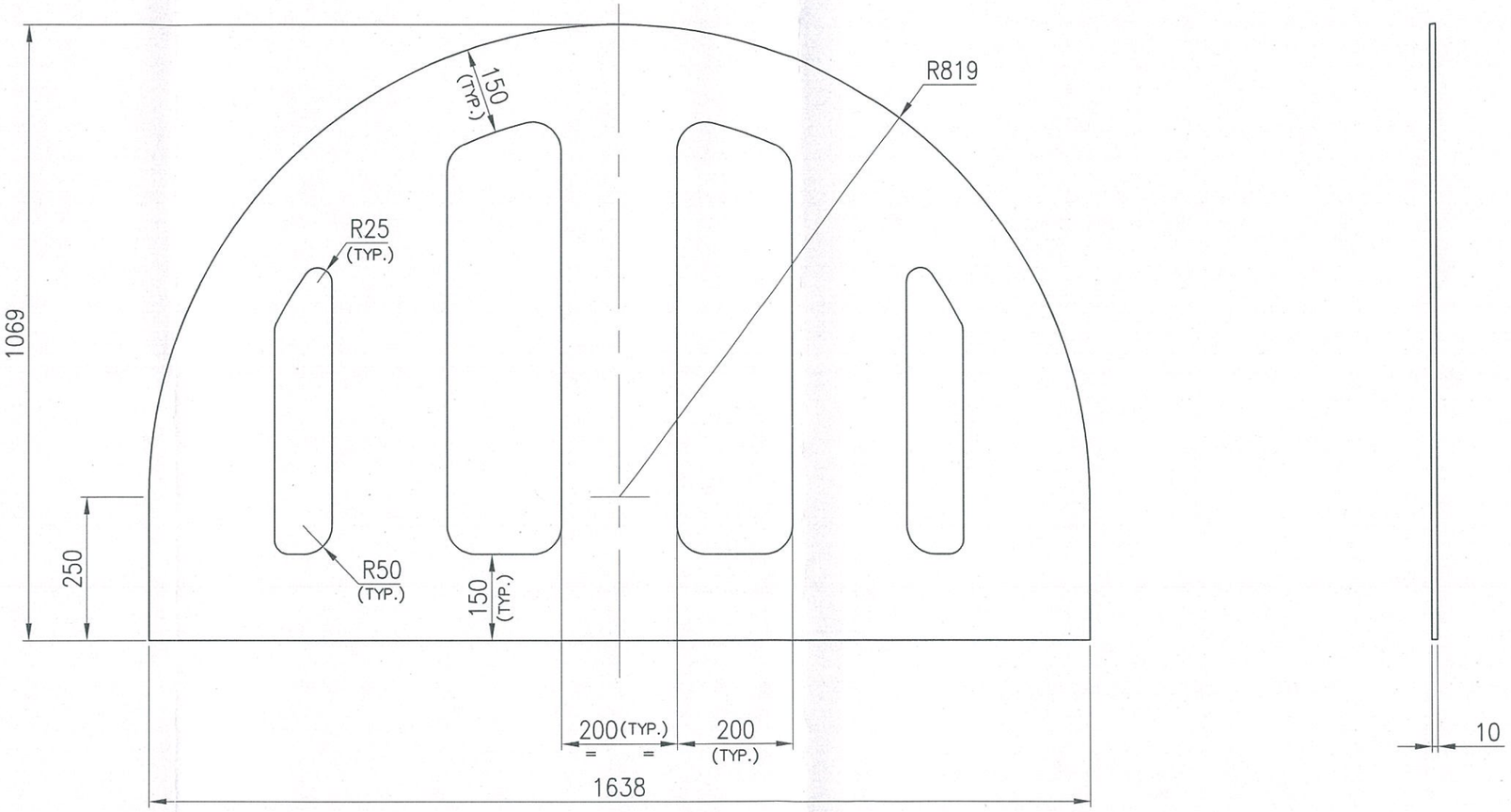

MACHINING DEVIATION TO ISI:2102 (MEDIUM GRADE) UNLESS SPECIFIED OTHERWISE

LENGTH OR DIA	UP TO 6	6 30	30 120	120 315	315 1000	1000 2000	2000 4000	4000 ABOVE
	LENGTH IN mm OF SHORTER SIDE OF ANGLE							
	UP TO 6	6–30	30–120	120–400				
	±6'	±30'	±20'	±10'				
B	±0.1	±0.2	±0.3	±0.5	±0.8	±1.2	±2.0	±3.0
C								
D								
E								
F								

FINISH : ▽

ITEM NO.	DESCRIPTION	MATERIAL	QTY.	WT.	REMARKS

DO NOT SCALE THE DRAWING
ASK IF IN DOUBT
UNLESS OTHERWISE SHOWN:–

ALL DIMENSIONS IN MILLIMETRES

REMOVE SHARP EDGES AND BURRS
CHAMFER 1mm X 45'

MACHINING FINISH IN MICRONS:–

▽ 8–25 ▽▽ 1.5–8
▽▽▽ 0.025–1.6 ▽▽▽▽ <0.025

REV.NO.	ZONE	DESCRIPTION	SIGN	DATE

REVISIONS ASSEMBLY DRG.

MATERIAL: Fe410WB IS2062

TITLE: CIRCULAR STIFFENER-4

No.OFF: 1

WT.Kg.

DGN.	Vineeth	26.7.18
DRN.	rajil	24.07
CHD.		26/7/18
CHD.		
APPD		27/7
2018	SIGN.	DATE

GOVERNMENT OF INDIA
INDIAN SPACE RESEARCH ORGANISATION
VIKRAM SARABHAI SPACE CENTRE
TRIVANDRUM

UNIT/DIVISION/PROJECT: CMSE/LCSD/SSLV

DRG.NO. 257-112-19-004 00 04

SCALE 1:10 SHEET 1 OF 1

rajil.d.senthil A3

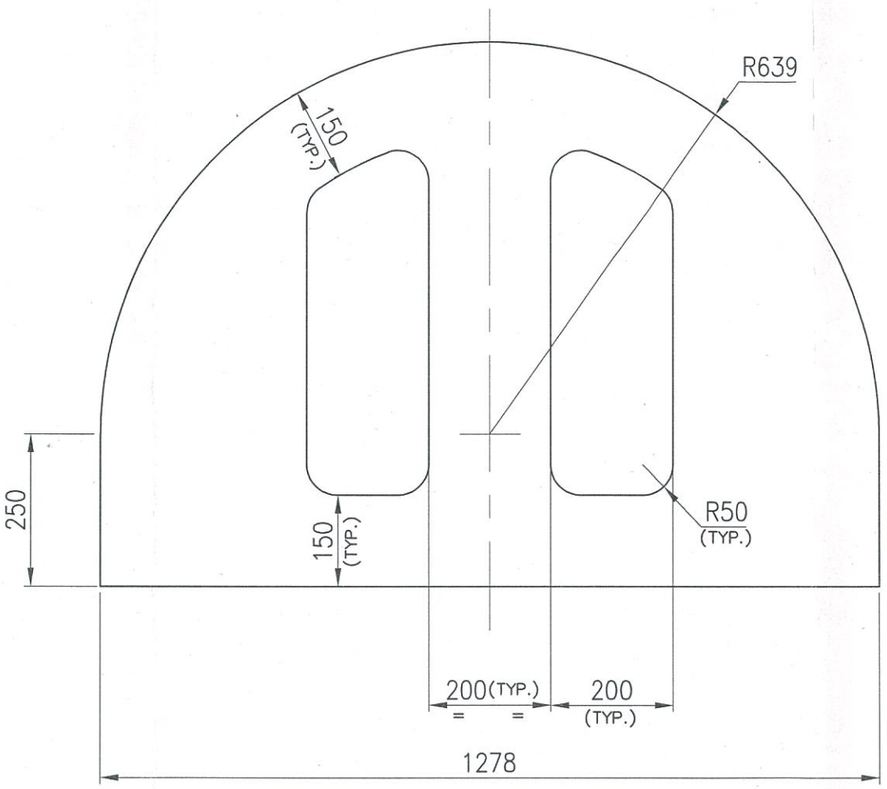

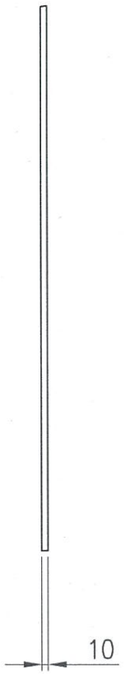

FINISH : ▽

ITEM NO.	DESCRIPTION	MATERIAL	QTY.	WT.	REMARKS

MACHINING DEVIATION TO IS:2102 (MEDIUM GRADE) UNLESS SPECIFIED OTHERWISE

LENGTH OR DIA	LENGTH IN mm OF SHORTER SIDE OF ANGLE									
	UP TO 6	6 30	30 120	120 315	315 1000	1000 2000	2000 4000	4000 ABOVE	UP TO 6	6–30	30–120	120–400
	±0.1	±0.2	±0.3	±0.5	±0.8	±1.2	±2.0	±3.0	±6'	±30'	±20'	±10'
B		C			D			E		F		

DO NOT SCALE THE DRAWING
ASK IF IN DOUBT
UNLESS OTHERWISE SHOWN:–

ALL DIMENSIONS IN MILLIMETRES

REMOVE SHARP EDGES AND BURRS
CHAMFER 1mm X 45°

MACHINING FINISH IN MICRONS:–

▽ 8–25 ▽▽ 1.5–8
▽▽▽ 0.025–1.6 ▽▽▽▽ <0.025

REV.NO.	ZONE	DESCRIPTION	SIGN	DATE

REVISIONS

ASSEMBLY DRG.

MATERIAL	Fe410WB IS2062	
DGN.	Vivek	26.7.18
DRN.	rajil	24.07
CHD.		26/7/18
CHD.		
APPD		27/7
2018	SIGN.	DATE

TITLE: CIRCULAR STIFFENER-5

No.OFF: 1

WT.Kg.

GOVERNMENT OF INDIA
INDIAN SPACE RESEARCH ORGANISATION
VIKRAM SARABHAI SPACE CENTRE
TRIVANDRUM

UNIT/DIVISION/PROJECT: CMSE/LCSD/SSLV

DRG.NO. 257-112-19-004 00 05

SCALE 1:10 SHEET 1 OF 1

rajil.d.senthil A3

4	3	2	1		
MACHINING FINISH MICRONS	▽▽▽▽ <0.025	▽▽▽ 0.025–1.6	▽▽ 1.6–8	▽ 8–25	~>25

Do not scale the drawing. Ask if in doubt, All dimensions are in mm, Remove sharp edges & burrs, Chamfer 1 X 45°

MACHINING DEVIATION TO ISI:2102 (MEDIUM GRADE) UNLESS SPECIFIED OTHERWISE

LENGTH OR DIA	UP TO 6	6 30	30 120	120 315	315 1000	1000 2000	2000 4000	4000 ABOVE
	±0.1	±0.2	±0.3	±0.5	±0.8	±1.2	±2.0	±3.0

LENGTH IN mm OF SHORTER SIDE OF ANGLE	UP TO 6	6–30	30–120	120–400
	±6'	±30'	±20'	±10'

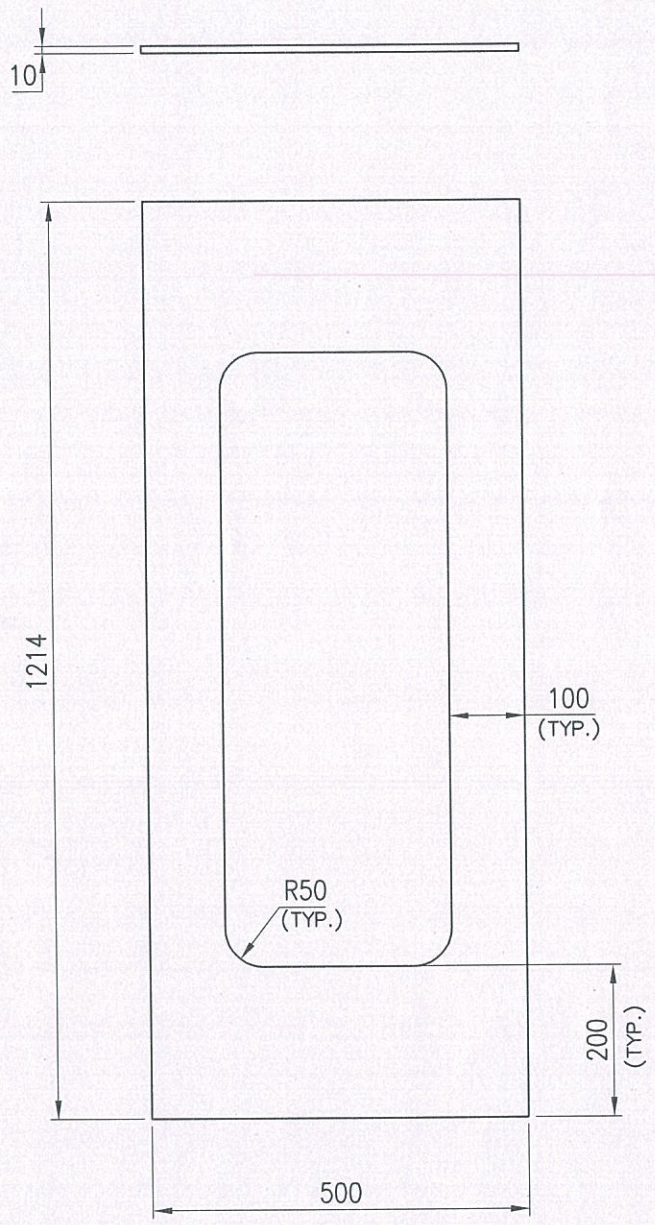

FINISH : ▽

MATERIAL	TITLE	No.OFF	WT.Kg.
Fe410WB IS2062	WEB-1	3	

DGN.	Vivek	26.07.18
DRN.	rajil	24.07
CHD.	[signature]	26/7/18
CHD.		
APPD	[signature]	27/7
2018	SIGN.	DATE

GOVERNMENT OF INDIA
INDIAN SPACE RESEARCH ORGANISATION
VIKRAM SARABHAI SPACE CENTRE
TRIVANDRUM

UNIT/DIVISION/PROJECT
CMSE/LCSD/SSLV

DRG.NO. 257-112-19-004 00 06

SCALE 1:10

SHEET 1 OF 1

REVISIONS | REVN NO | ZONE | SIGN | DATE | A | B | C | D

rajil.d.senthil A4

4	3	2	1
MACHINING FINISH MICRONS	▽▽▽▽ <0.025	▽▽▽ 0.025–1.6	▽▽ 1.6–8	▽ 8–25	~>25

Do not scale the drawing. Ask if in doubt, All dimensions are in mm, Remove sharp edges & burrs, Chamfer 1 X 45°

| MACHINING DEVIATION TO ISI:2102 (MEDIUM GRADE) UNLESS SPECIFIED OTHERWISE | | |

4	3	2	1
MACHINING FINISH MICRONS	▽▽▽▽ <0.025	▽▽▽ 0.025–1.6	▽▽ 1.6–8 ▽ 8–25 ~>25

Do not scale the drawing. Ask if in doubt, All dimensions are in mm, Remove sharp edges & burrs, Chamfer 1 X 45°

| MACHINING DEVIATION TO ISI:2102 (MEDIUM GRADE) UNLESS SPECIFIED OTHERWISE | | |

4	3	2	1
MACHINING FINISH MICRONS	▽▽▽▽ <0.025	▽▽▽ 0.025–1.6	▽▽ 1.6–8	▽ 8–25	~>25

Do not scale the drawing. Ask if in doubt, All dimensions are in mm, Remove sharp edges & burrs, Chamfer 1 X 45°

MACHINING DEVIATION TO ISI:2102 (MEDIUM GRADE) UNLESS SPECIFIED OTHERWISE											LENGTH IN mm OF SHORTER SIDE OF ANGLE			
LENGTH OR DIA	UP TO 6	6 30	30 120	120 315	315 1000	1000 2000	2000 4000	4000 ABOVE	UP TO 6	6–30	30–120	120–400
	±0.1	±0.2	±0.3	±0.5	±0.8	±1.2	±2.0	±3.0	±6'	±30'	±20'	±10'

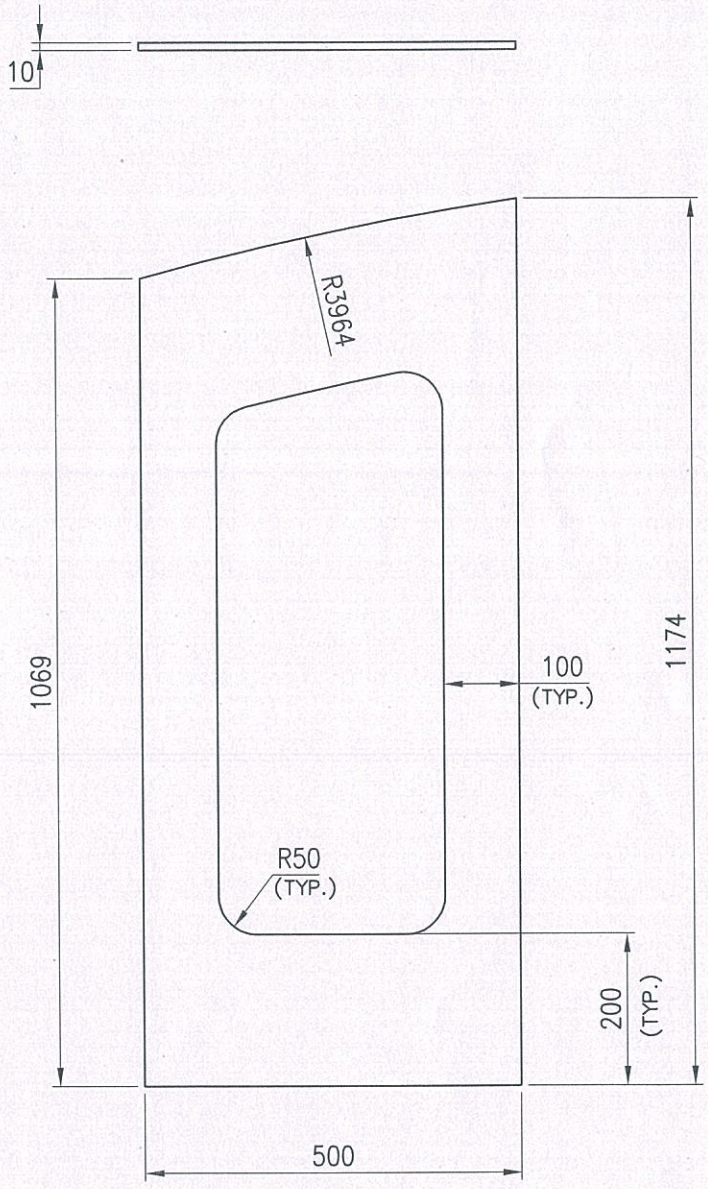

FINISH : ▽

REVISIONS	ZONE	REVN NO	DATE	SIGN

MATERIAL: Fe410WB IS2062	TITLE: WEB-4	No.OFF: 1 / WT.Kg.
DGN. Vineeth 26.7.18	GOVERNMENT OF INDIA	UNIT/DIVISION/PROJECT
DRN. rajil 24.07	INDIAN SPACE RESEARCH ORGANISATION	CMSE/LCSD/SSLV
CHD. [signature] 26/7/18	VIKRAM SARABHAI SPACE CENTRE, TRIVANDRUM	
CHD.	DRG.NO. 257-112-19-004 00 09	
APPD [signature] 27/7	SCALE 1:10	SHEET 1 OF 1
2018 SIGN. DATE		

rajil.d.senthil A4

4	3	2	1
MACHINING FINISH MICRONS	▽▽▽▽ <0.025	▽▽▽ 0.025–1.6	▽▽ 1.6–8	▽ 8–25	~>25

Do not scale the drawing. Ask if in doubt, All dimensions are in mm, Remove sharp edges & burrs, Chamfer 1 X 45°

| MACHINING DEVIATION TO ISI:2102 (MEDIUM GRADE) UNLESS SPECIFIED OTHERWISE | | |

| MACHINING DEVIATION TO ISI:2102 (MEDIUM GRADE) UNLESS SPECIFIED OTHERWISE | | |

4	3	2	1
MACHINING FINISH MICRONS	▽▽▽▽ <0.025	▽▽▽ 0.025–1.6	▽▽ 1.6–8	▽ 8–25	~>25

Do not scale the drawing. Ask if in doubt, All dimensions are in mm, Remove sharp edges & burrs, Chamfer 1 X 45°

MACHINING DEVIATION TO ISI:2102 (MEDIUM GRADE) UNLESS SPECIFIED OTHERWISE														
LENGTH OR DIA	UP TO 6	6 30	30 120	120 315	315 1000	1000 2000	2000 4000	4000 ABOVE	LENGTH IN mm OF SHORTER SIDE OF ANGLE	UP TO 6	6–30	30–120	120–400
	±0.1	±0.2	±0.3	±0.5	±0.8	±1.2	±2.0	±3.0		±6'	±30'	±20'	±10'

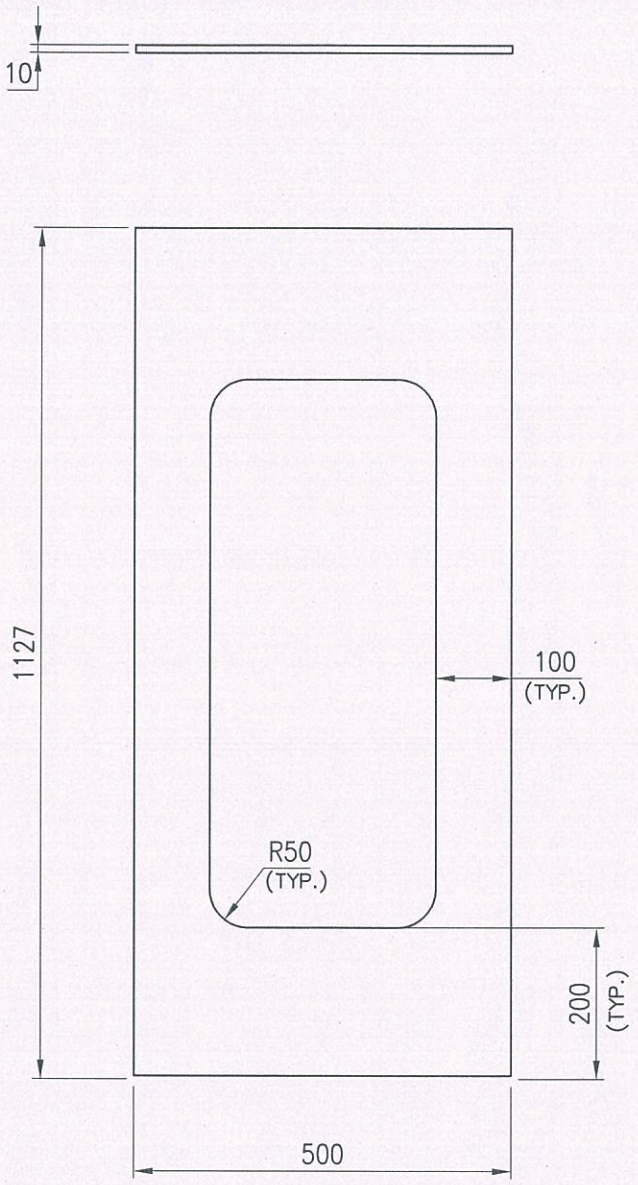

FINISH : ▽

REVISIONS	ZONE	REVN NO	DATE	SIGN
A				
B				
C				
D				

MATERIAL: Fe410WB IS2062	TITLE: WEB-7	No.OFF: 6 / WT.Kg.
DGN. Vineeth 26.7.18	GOVERNMENT OF INDIA	UNIT/DIVISION/PROJECT
DRN. rajil 24.07	INDIAN SPACE RESEARCH ORGANISATION	CMSE/LCSD/SSLV
CHD. 26/7/18	VIKRAM SARABHAI SPACE CENTRE, TRIVANDRUM	
CHD.	DRG.NO. 257-112-19-004 00 12	
APPD 27/7	SCALE 1:10	SHEET 1 OF 1
2018 SIGN. DATE		

rajil.d.senthil A4

4	3	2	1
MACHINING FINISH MICRONS	▽▽▽▽ <0.025	▽▽▽ 0.025–1.6	▽▽ 1.6–8	▽ 8–25	~ >25

Do not scale the drawing. Ask if in doubt, All dimensions are in mm, Remove sharp edges & burrs, Chamfer 1 X 45°

| MACHINING DEVIATION TO ISI:2102 (MEDIUM GRADE) UNLESS SPECIFIED OTHERWISE | | |

4	3	2	1	
MACHINING FINISH MICRONS	▽▽▽▽ <0.025	▽▽▽ 0.025–1.6	▽▽ 1.6–8	▽ 8–25	~>25

Do not scale the drawing. Ask if in doubt, All dimensions are in mm, Remove sharp edges & burrs, Chamfer 1 X 45°

MACHINING DEVIATION TO ISI:2102 (MEDIUM GRADE) UNLESS SPECIFIED OTHERWISE

LENGTH OR DIA	UP TO 6	6 30	30 120	120 315	315 1000	1000 2000	2000 4000	4000 ABOVE	LENGTH IN mm OF SHORTER SIDE OF ANGLE UP TO 6	6–30	30–120	120–400
	±0.1	±0.2	±0.3	±0.5	±0.8	±1.2	±2.0	±3.0	±6'	±30'	±20'	±10'

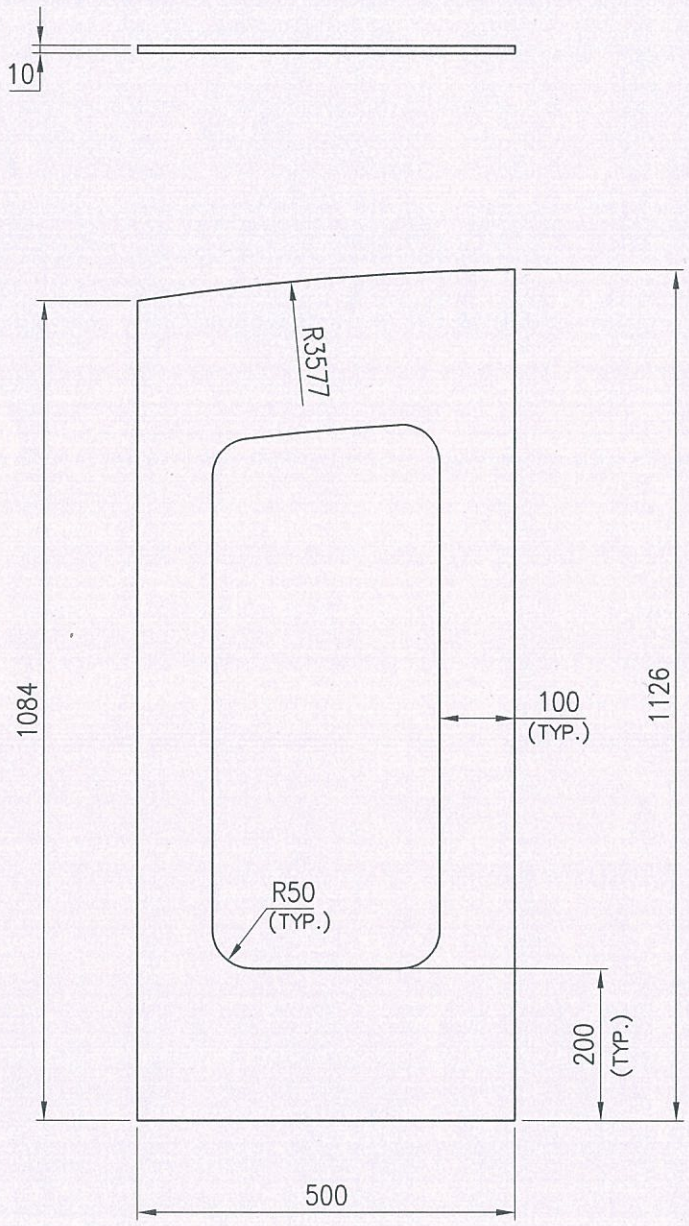

FINISH : ▽

MATERIAL	TITLE	No.OFF	WT.Kg.
Fe410WB IS2062	WEB-9	2	

DGN.	Vivek	26.7.18
DRN.	rajil	24.07
CHD.	[signature]	26/7/18
CHD.		
APPD	[signature]	27/7
2018	SIGN.	DATE

GOVERNMENT OF INDIA
INDIAN SPACE RESEARCH ORGANISATION
VIKRAM SARABHAI SPACE CENTRE
TRIVANDRUM

UNIT/DIVISION/PROJECT
CMSE/LCSD/SSLV

DRG.NO. 257-112-19-004 00 14

SCALE 1:10

SHEET 1 OF 1

REVISIONS | REVN NO | ZONE | A | SIGN | DATE | B | C | D

rajil.d.senthil A4

4	3	2	1	
MACHINING FINISH MICRONS	▽▽▽▽ <0.025	▽▽▽ 0.025–1.6	▽▽ 1.6–8	▽ 8–25	~>25

Do not scale the drawing. Ask if in doubt, All dimensions are in mm, Remove sharp edges & burrs, Chamfer 1 X 45°

MACHINING DEVIATION TO ISI:2102 (MEDIUM GRADE) UNLESS SPECIFIED OTHERWISE

LENGTH OR DIA	UP TO 6	6 30	30 120	120 315	315 1000	1000 2000	2000 4000	4000 ABOVE	LENGTH IN mm OF SHORTER SIDE OF ANGLE UP TO 6	6–30	30–120	120–400
	±0.1	±0.2	±0.3	±0.5	±0.8	±1.2	±2.0	±3.0	±6'	±30'	±20'	±10'

REVISIONS	REVN NO	ZONE	A	SIGN	DATE	B	C	D

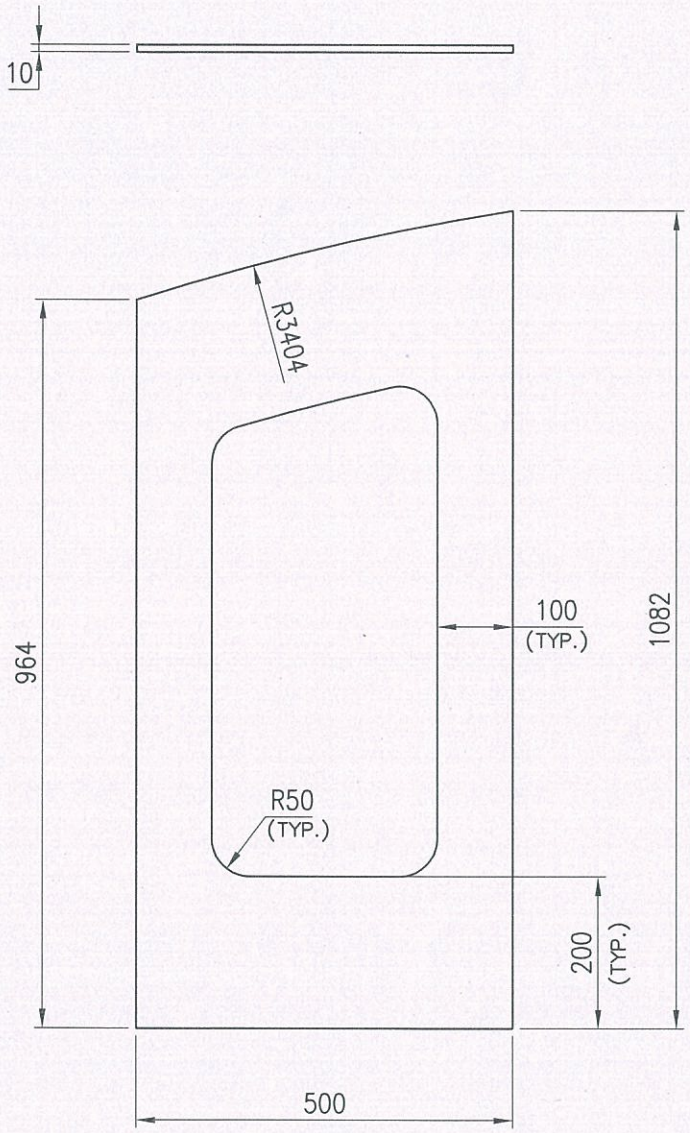

FINISH : ▽

MATERIAL	TITLE	No.OFF	WT.Kg.
Fe410WB IS2062	WEB-10	2	

DGN.	Vinuel	26.7.18
DRN.	rajil	24.07
CHD.	[signature]	26/7/18
CHD.		
APPD	[signature]	27/7
2018	SIGN.	DATE

GOVERNMENT OF INDIA
INDIAN SPACE RESEARCH ORGANISATION
VIKRAM SARABHAI SPACE CENTRE
TRIVANDRUM

UNIT/DIVISION/PROJECT
CMSE/LCSD/SSLV

DRG.NO. 257-112-19-004 00 15

SCALE 1:10 | SHEET 1 OF 1

rajil.d.senthil A4

4	3	2	1		
MACHINING FINISH MICRONS	▽▽▽▽ <0.025	▽▽▽ 0.025–1.6	▽▽ 1.6–8	▽ 8–25	~>25

Do not scale the drawing. Ask if in doubt, All dimensions are in mm, Remove sharp edges & burrs, Chamfer 1 X 45°

MACHINING DEVIATION TO ISI:2102 (MEDIUM GRADE) UNLESS SPECIFIED OTHERWISE

LENGTH OR DIA	UP TO 6	6 30	30 120	120 315	315 1000	1000 2000	2000 4000	4000 ABOVE	LENGTH IN mm OF SHORTER SIDE OF ANGLE UP TO 6	6–30	30–120	120–400
	±0.1	±0.2	±0.3	±0.5	±0.8	±1.2	±2.0	±3.0	±6'	±30'	±20'	±10'

REVISIONS	SIGN	DATE
A		
B		
C		
D		

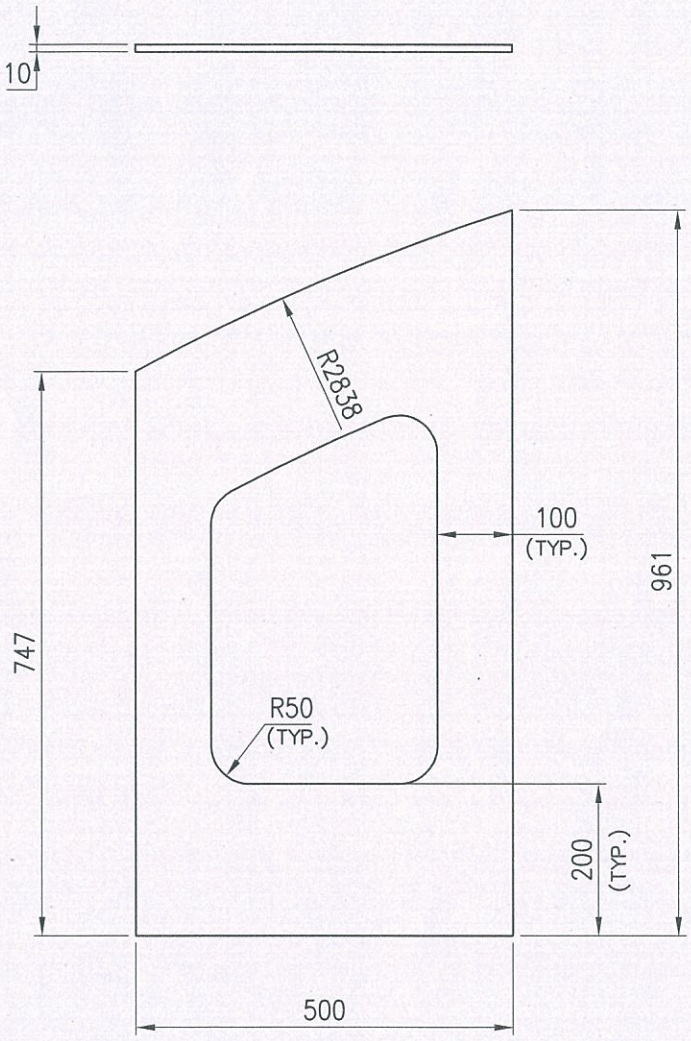

FINISH : ▽

MATERIAL	TITLE	No.OFF	WT.Kg.
Fe410WB IS2062	WEB-11	2	

DGN.	Vivek	26.7.18
DRN.	rajil	24.07
CHD	[signature]	26/7/18
CHD.		
APPD	[signature]	27/7
2018	SIGN.	DATE

GOVERNMENT OF INDIA
INDIAN SPACE RESEARCH ORGANISATION
VIKRAM SARABHAI SPACE CENTRE
TRIVANDRUM

UNIT/DIVISION/PROJECT
CMSE/LCSD/SSLV

DRG.NO. 257-112-19-004 00 16

SCALE 1:10

SHEET 1 OF 1

rajil.d.senthil A4

4	3	2	1	
MACHINING FINISH MICRONS	▽▽▽▽ <0.025	▽▽▽ 0.025–1.6	▽▽ 1.6–8	▽ 8–25	~ >25

Do not scale the drawing. Ask if in doubt, All dimensions are in mm, Remove sharp edges & burrs, Chamfer 1 X 45°

MACHINING DEVIATION TO ISI:2102 (MEDIUM GRADE) UNLESS SPECIFIED OTHERWISE														
LENGTH OR DIA	UP TO 6	6 30	30 120	120 315	315 1000	1000 2000	2000 4000	4000 ABOVE	LENGTH IN mm OF SHORTER SIDE OF ANGLE	UP TO 6	6–30	30–120	120–400	
	±0.1	±0.2	±0.3	±0.5	±0.8	±1.2	±2.0	±3.0		±6'	±30'	±20'	±10'	

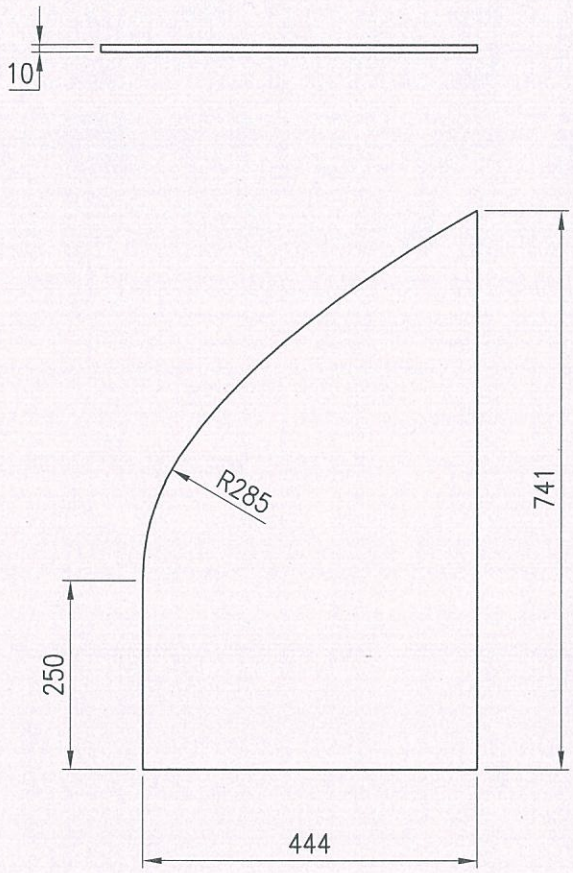

FINISH : ▽

REVISIONS				REVN NO
			A	ZONE
			B	
			C	
			D	
			SIGN	
			DATE	

MATERIAL	TITLE	No.OFF	WT.Kg.
Fe410WB IS2062	WEB-12	2	

DGN.	Vinu	26.7.18
DRN.	rajil	24.07
CHD.	[signature]	26/7/18
CHD.		
APPD	[signature]	26/7
2018	SIGN.	DATE

GOVERNMENT OF INDIA
INDIAN SPACE RESEARCH ORGANISATION
VIKRAM SARABHAI SPACE CENTRE
TRIVANDRUM

UNIT/DIVISION/PROJECT
CMSE/LCSD/SSLV

DRG.NO.
257-112-19-004 00 17

SCALE 1:10 | SHEET 1 OF 1

rajil.d.senthil A4

Annexure-1

LCSD/SPLF/Metallic/Mould/2018

Fabrication procedure of Mould for SSLV Ogive PLF

Ref: Drawing No. 257-112-19-004 00 00

1. Job involves rolling of 35mm thick plates
2. Tack-Weld rolled sheets to make Ogive profile as per drawing.
3. Verify the overall profile and dimensions of the welded shell.
4. Complete the welding of the sheets together. All the joints should be arc welded & weld quality should be confirmed by DP test and report to be submitted.
5. Two joints have been identified (Joint1 & joint 2) in the drawing hence hardware should be fabricated with minimum two joints if possible.
6. Shell to web & shell to circular stiffener to be welded by intermittent weld.
7. Carry out stress relieving of the full mould. Stress relieving should be done by heating method only. Stress relieving report to be provided.
8. Carry out rough machining of the shell outer surface and maintain 5-10mm allowance for final machining.
9. Again verify the profile and dimensions of the Shell and inspection report should be submitted.
10. Carry out final machining on the outer surface of the Shell to get the final dimensions. 20mm minimum shell thickness shall be maintained.
11. Backup structure of tool to be sandblasted/grit blasted and to be painted, which can withstand operating temperature of 200°C for minimum 50 cycles.
12. Moulding surface to be coated with nickel or chromium or hot dip galvanization of about 100 micron thickness and surface finish of ∇∇ should be maintained.
13. Detachable wheel assembly (Blickle make of 2.5 ton load rating) with braking system should be incorporated in the mould at the location provided in the drawing.

✓ **Acceptance plan of the mould**

i. Shell should be leak proof at 1 bar vacuum and 200°C temperature. Leak test will be carried out at VSSC.
ii. Minimum thickness of mould shell (item no.1 from drawing) should be demonstrated and report should be provided.
iii. Dimension inspection of the realized mould should be demonstrated and report should be provided. However final acceptance is based on inspection at VSSC.